LTR	REVISION RECORD	ECN NO.	DRG	DATE
A	First Issue	RD13-0825001	King	8/25'13

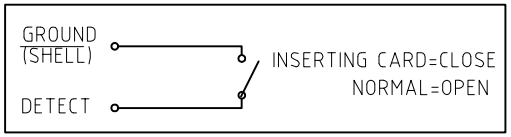

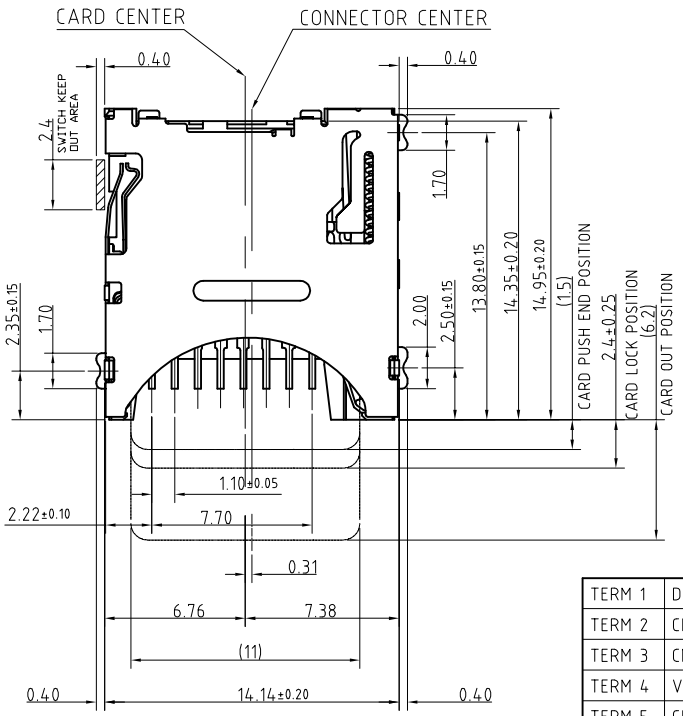

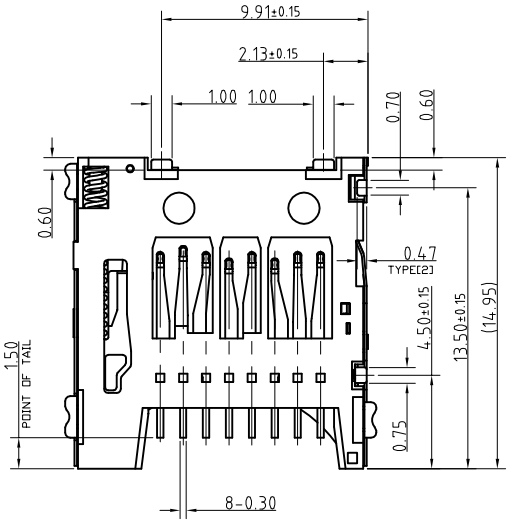

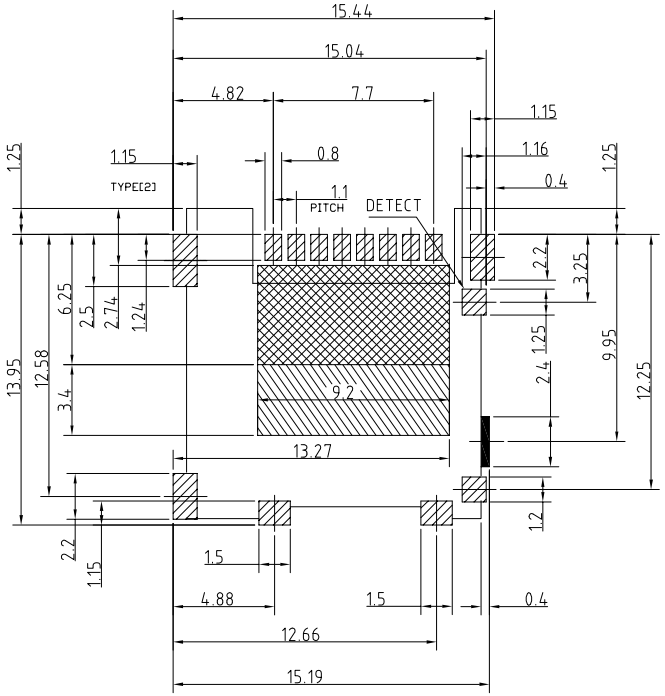

SOLDERPROHIBITED AREA

PATTERN PROHIBITED AREA

PROHIBITED AREA

RECOMMENDED
PCB PATTERN LAYOUT(TOP VIEW)
TOLERANCE: ±0.05

TERM 1	DATA 2
TERM 2	CD/DATA 3
TERM 3	CMD
TERM 4	VDD
TERM 5	CLK
TERM 6	VSS
TERM 7	DATA 0
TERM 8	DATA 1

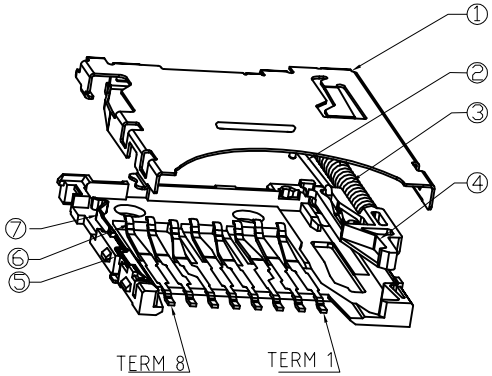

NO.	PART NAME	Q'TY	DESCRIPTION	
7	DETECT	1	COPPER ALLOY	GOLD PLATING
6	TERMINAL	1	COPPER ALLOY	GOLD PLATING
5	HOUSING	1	THERMAL PLASTIC	
4	SLIDER	1	THERMAL PLASTIC	
3	SPRING	1	SUS	
2	CAM FOLLOWER	1	SUS	
1	SHELL	1	SUS	Ni PLATING

NOTES:

1. COPLANARTY SPEC. FOR ALL SOLDER TAILS AND SOLDER PADS IS 0.1mm MAX.
2. ELECTRICAL CHARACTERISTICS:
   - 2-1. CURRENT RATING: 0.5 Amp. MAX.
   - 2-2. VOLTAGE: 100V DC. MAX.
   - 2-3. LOW LEVEL CONTACT RESISTANCE: 100 mOhms MAX. INITIALLY.
   - 2-4. DIELECTRIC WITHSTANDING VOLTAGE: 500V AC MIN. FOR 1 MINUTE.
   - 2-5. INSULATION RESISTANCE: (INITIAL) 1000MOhms MIN.. (FINAL) 100MOhms MIN. BY APPLYING 500V DC ON MATED AND UNMATED CONNECTORS THROUGH MIL-STD-202, METHOD 302.
3. MECHANICAL CHARACTERISTICS:
   - 3-1. DURABILITY: 5000 CYCLES.
   - 3-2. OPERATING TEMP. RANGE: -25°C TO 85°C. (INCLUDING TERMINAL TEMP. RISE)
   - 3-3. STORAGE TEMP.: -40°C TO 85°C.
4. QUANTITY OF PRODUCTS: 1500PCS/REEL
5. PLEASE CONTACT PROMAX SALES REPRESENTATIVE TO VERIFY PRODUCT DETAILS.

DO NOT SCALE DRAWING

CUSTOMER INSPECTION DRAWING

APPROVED:	Jean Long
CHECKED:	Jean Long
DRAWING:	King Hsu

深 圳 市 普 玛 斯 精 密 组 件 有 限 公 司

SHENZHEN PROMAX EXACTITUDE DISCRETENESS CO.,LTD .

GENERAL TOLERANCES	
.X:	±0.30
.XX:	±0.20
.XXX:	±0.10
ANGEL:	±1°
SHEET:	1 / 1

TITLE: 1.45H Push-Push Micro SD Card

PART NO: MC03-41145-7F

DWG NO: MC03-41145

REV: A | UNIT: mm | SCALE: / | SHEET: A4

THIS DRAWING CONTAINS INFORMATION THAT IS PROPRIETARY TO PROMAX ELECTRONIC CO.,LTD.AND SHOULD NOT BE USED WITHOUT WRITTEN PERMISSION.